ETX-35P

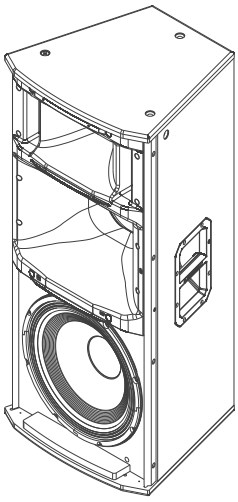

- 2000 W amplifier and 136 dB peak SPL
- Single-knob DSP includes presets for multiple configurations and top+sub combinations (performance style, locations, and space)
- Loudspeaker system performance monitoring via integrated LCD and front panel LED
- Features three high-sensitivity transducers, for high output sound which is optimized for precise coverage and low distortion
- Designed for floor, stacked, or a combo pole cup (insert and threaded) for portable or permanent installation (Eight (8) M10 threaded suspension points)

ETX-35P from Electro-Voice is a high-power three-way loudspeaker, it can be used in a variety of portable and permanent applications.
The DSP (Digital Signal Processing) menus offer extensive configurations, crossovers, selective voicing, protection limiters, EQ modes, and a lockout mode prevents casual changes to the system. Loudspeaker system performance is optimized via an LCD screen. The front LED indicates power or can be configured to indicate limit.
ETX-35P features three (3) high-sensitivity transducers, for high output sound which is optimized for precise coverage and low distortion. ETX EV designed and manufactured transducers include SMX woofer technology using composite cone materials, flux stabilizing rings, and thermal management. This transducer yields lower distortion, smooth response and high SPL. The high-efficiency DH3-B compression driver has a convex diaphragm driving a coherent phase device extending frequency response to 20 kHz. EV's FIR-Drive technology utilized the latest FIR (Finite Impulse Response) filter technology to optimize transducer linearity and advanced limiter algorithms for independent peak and thermal transducer protection. The enclosure is constructed out of 18-mm, 13-ply birch plywood finished with EVCoat.

ETX combines EV-engineered intelligent DSP, high-powered amplifiers and high-efficiency transducers to deliver that legendary EV sound and performance.

Technical specifications

Frequency Response (-3 dB):	48 Hz – 20 kHz[1]
Frequency Range (-10 dB):	38 Hz – 20 kHz[1]
Maximum SPL:	136 dB peak[2]
Coverage (H x V):	60° x 40°
Power Rating:	2000 W
LF Transducer:	SMX2151 380 mm (15 in)
MB Transducer:	EVS-6C 6.5-in mid-bass driver
HF Transducer:	DH3-B 1.25-in titanium compression driver
Crossover Frequency:	700 Hz, 2900 Hz
Connectors:	(2) XLR/TRS combo jack and (1) XLR link output

Enclosure:	18 mm, 13-ply birch plywood with EVCoat
Grille:	16AWG steel with powdercoat
Suspension:	(8) M10 suspension points
Dimensions (H x W x D):	1023 mm x 469 mm x 426 mm (40 in x 18 in x 17 in)
Net Weight:	38.2 kg (84.2 lb)
Shipping Weight:	42.8 kg (94.4 lb)
Power Consumption:	100 – 240 V~, 50 – 60 Hz, 1.6 – 0.8 A[3]

1. Full space measurement using the music DSP preset.
2. Maximum SPL is measured at 1 m using broadband pink noise at maximum output.
3. Current rating is 1/8 power.

System overview

Frequency response:

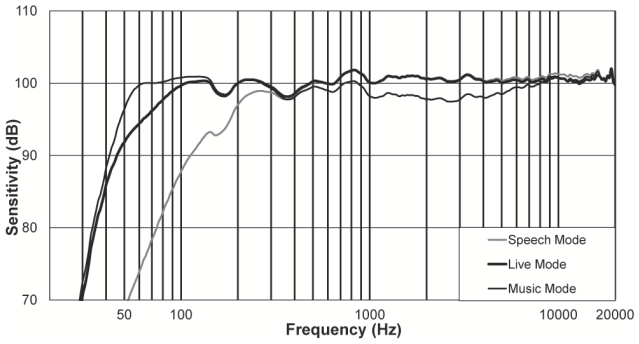

Caution!

This Electro-Voice loudspeaker should be suspended overhead only in accordance with the procedures and limitations specified in the User's Manual and possible manual update notices. This system should be suspended with certified rigging hardware by an authorized rigging professional and in compliance with local, state, and federal overhead suspension ordinances.

ETX full-range loudspeaker amplifier panel:

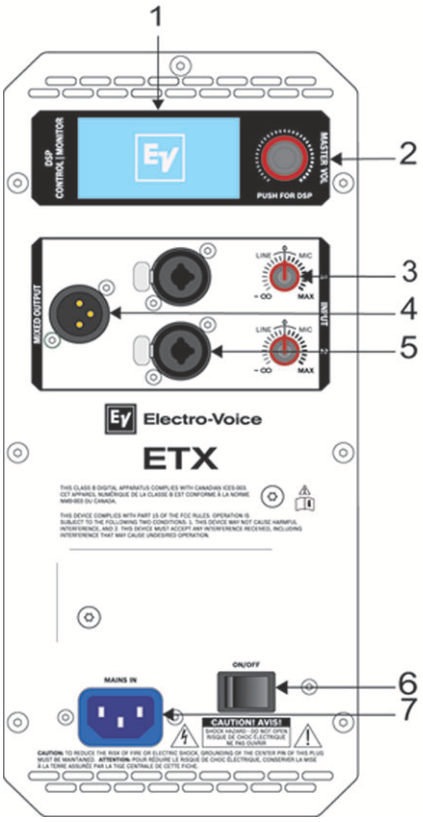

1. LCD
2. MASTER VOL/DSP
3. INPUT LEVEL
4. INPUT
5. MIX OUTPUT
6. POWER
7. MAINS IN

For more information, see the user manual.

Dimension drawing:

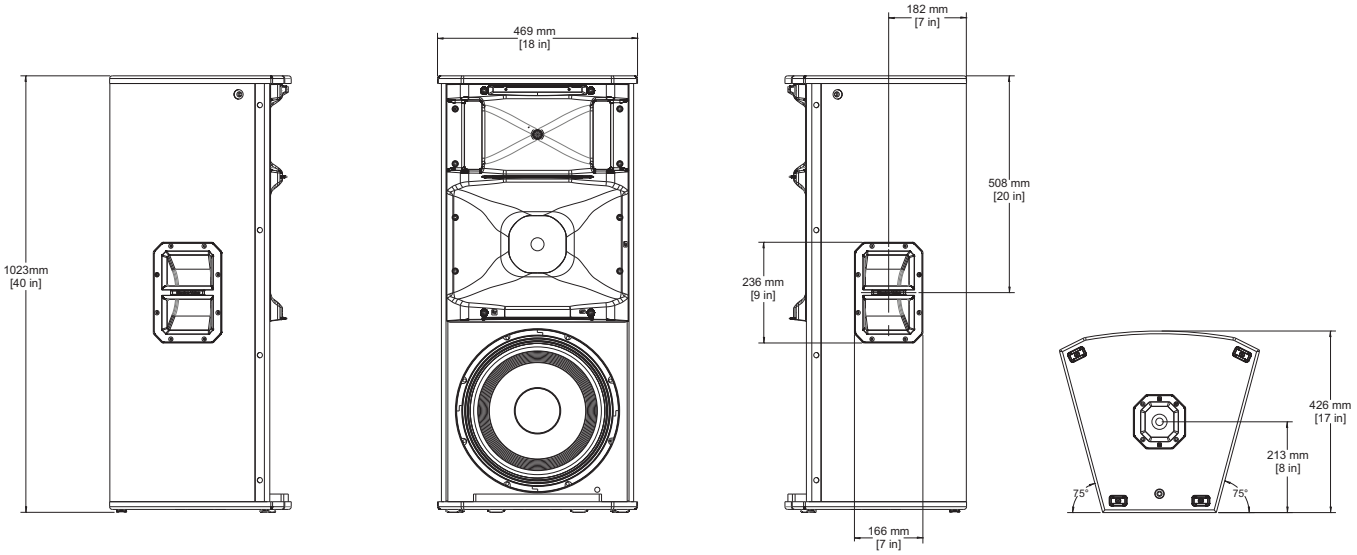

Left View | Front View | Right View | Bottom View

Ordering information

ETX-35P US
15 inch 3-way powered loudspeaker, black, US 120V
Order number **ETX-35P-US**

ETX-35P EU
15 inch 3-way powered loudspeaker, black, EU 240V
Order number **ETX-35P-EU**

Accessories

ETX Array Bracket Kit
ETX array bracket kit
Order number **ETX-ARY-BRKT**

ETX-35P-CVR
Padded cover for ETX-35P, EV logo
Order number **ETX-35P-CVR**

Represented by:

Germany:
Bosch Sicherheitssysteme GmbH
Robert-Bosch-Ring 5
85630 Grasbrunn
Germany

Bosch Security Systems, Inc.
12000 Portland Avenue South
Burnsville MN 55337
USA

www.electrovoice.com

© Bosch Security Systems 2014 | Data subject to change without notice
Document Number F.01U.276.081 | Vs1 | 02. Jan 2014